YALE 8kW - ROOM HEATER - DIMENSIONS

HENLEY STOVES

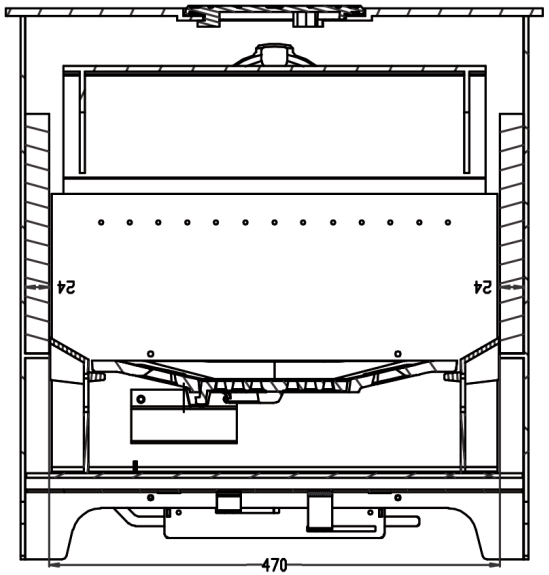

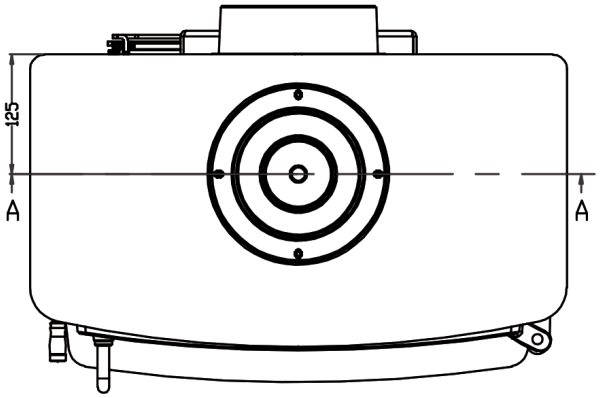

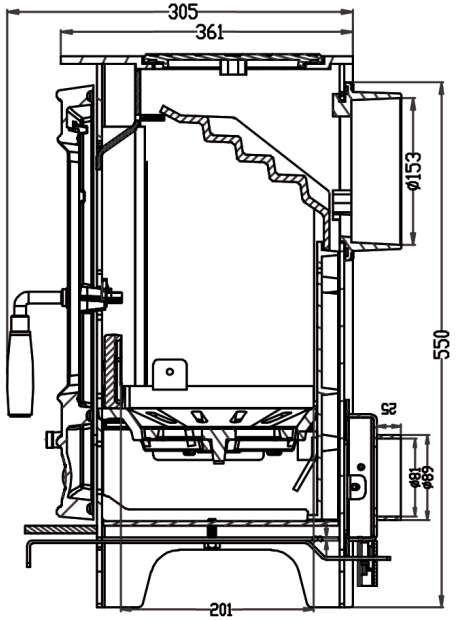

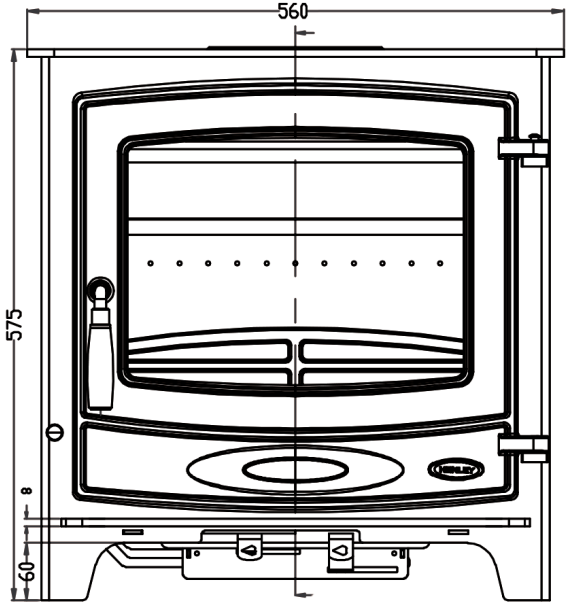

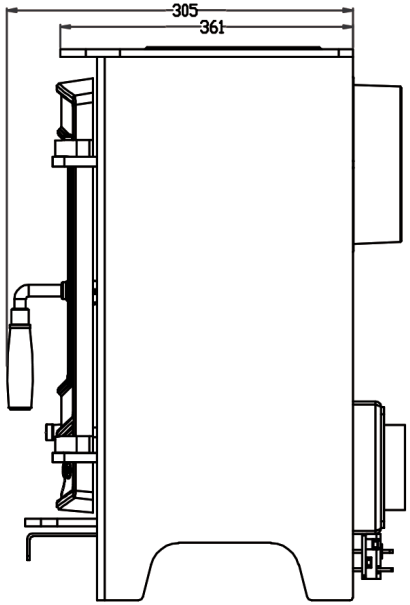

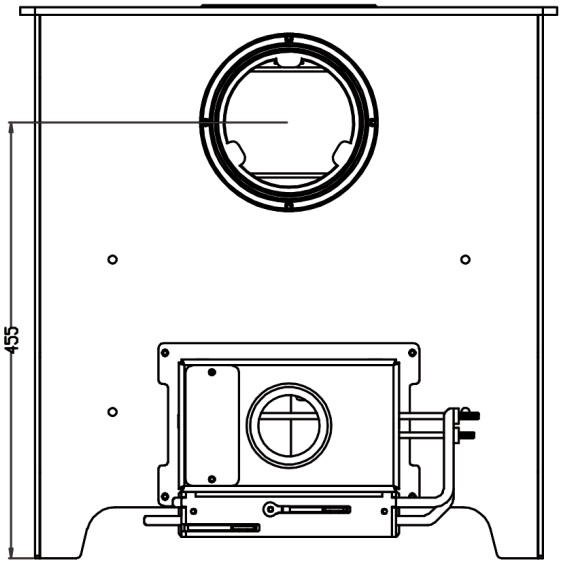

HEIGHT: 575MM | WIDTH: 560MM | DEPTH: 305MM | FLUE SIZE: 153MM